ROTECH

Vehicle Access Control
Pedestrian Access Control
Safety & Security Equipment

T: +61 7 3205 1123 www.rotech.com.au e: info@rotech.com.au

D5 EVO Sliding Gate Operator
Solar Installation Instructions

Introduction

Solar installations are used in situations where there is no 240v mains but there are some drawbacks and maintenance of the equipment is needed.

Points to Consider Include:

- Can the solar panel be mounted in a position where it will get sunlight most of the day i.e. away from trees or buildings that shade the panel?
- The panels should be mounted at a height of at least 2 metres facing north and at the angle shown in the attached table.
- The cable between the panel and the battery should be 4mm solar cable and if the cable length is more than 5 metres contact us for more information.
- The panel needs to be kept clean as dirt and bird droppings can cut the efficacy by 70% which reduces the number of operations the batteries can handle.
- If the equipment is going to be used at night this greatly reduces the number of operations that can be achieved as the equipment will be drawing power from the batteries and there will be no charging current from the solar panel.

CITY	ANGLE
Canberra	35°
Hobart	42°
Darwin	12°
Adelaide	35°
Perth	31°
Brisbane	27°
Melbourne	37°
Sydney	34°

D5 EVO Solar Installation Wiring

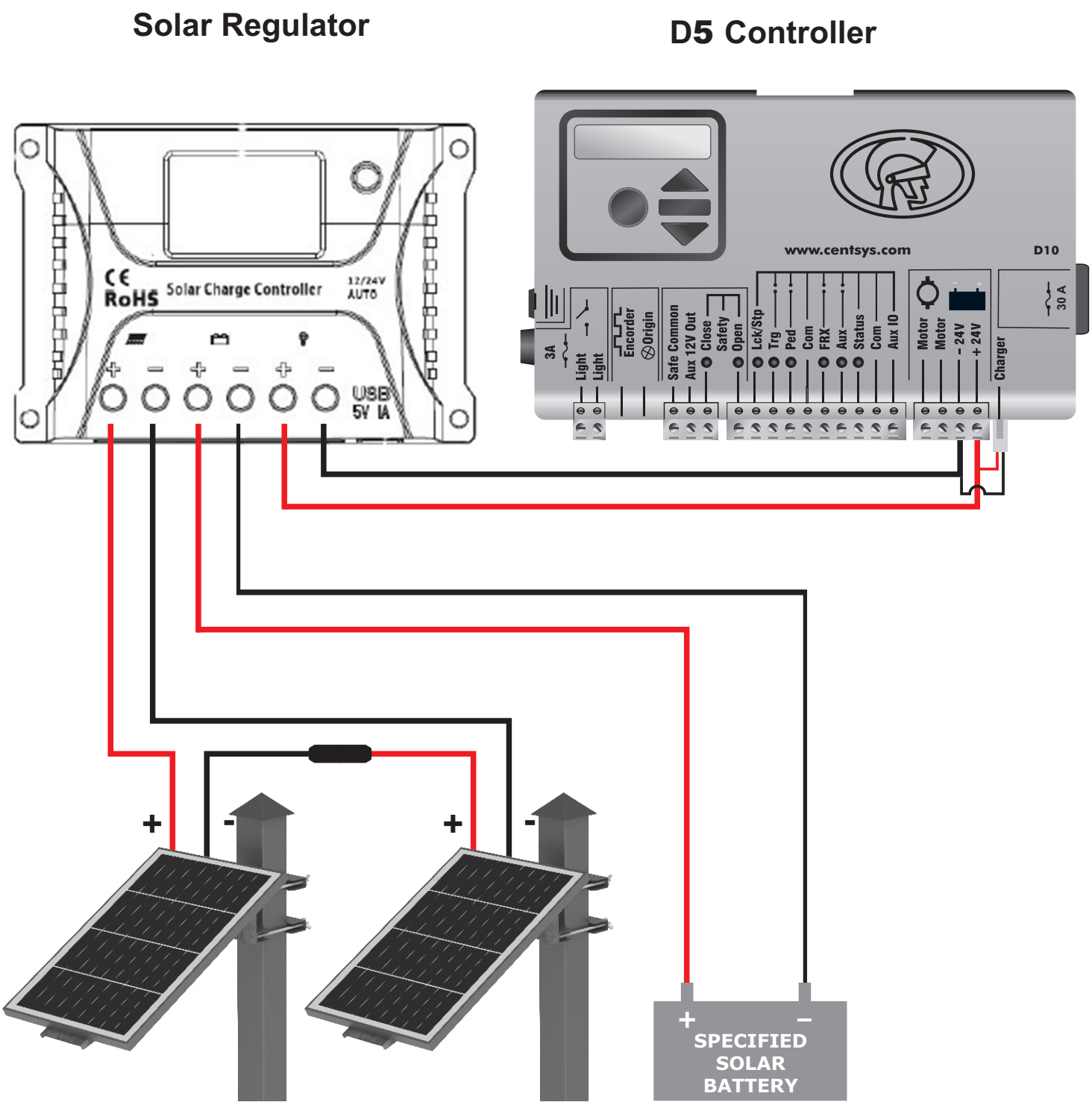

*Solar Panels: 20W - 150W
*Solar Panel Brackets: 20W - 150W

*Batteries: 33Ah - 200Ah

Solar Regulator Installation Manual

PWM Charge Controller with LCD Display

10A | 20A

User Manual

Product Features

1. 12V/ 24 V system voltages are automatically recognized.
2. An upgraded 3-stage PWM charging algorithm is adopted. Application of an equalizing charging to the battery periodically or when over discharged, can effectively prevent the battery from non-equalization and sulfuration, thus extending the battery's service life.
3. With temperature compensation employed, charging parameters can be automatically adjusted.
4. A wide range of load working modes facilitate the product's application to different types of load.
5. The product provides overcharge, over-discharge, overload protection, as well as short-circuit protection.
6. By virtue of an advanced load starting method, large-capacitance loads can be started smoothly.
7. The product provides a dot matrix graphic LCD screen and a human-machine interface with a key.
8. The user-friendly design of browser and dynamic interfaces ensure convenient and intuitive operations.
9. Boasting an industrial grade design, the product can function well in various tough conditions.
10. TVS lighting protection is adopted.

Panel Structure

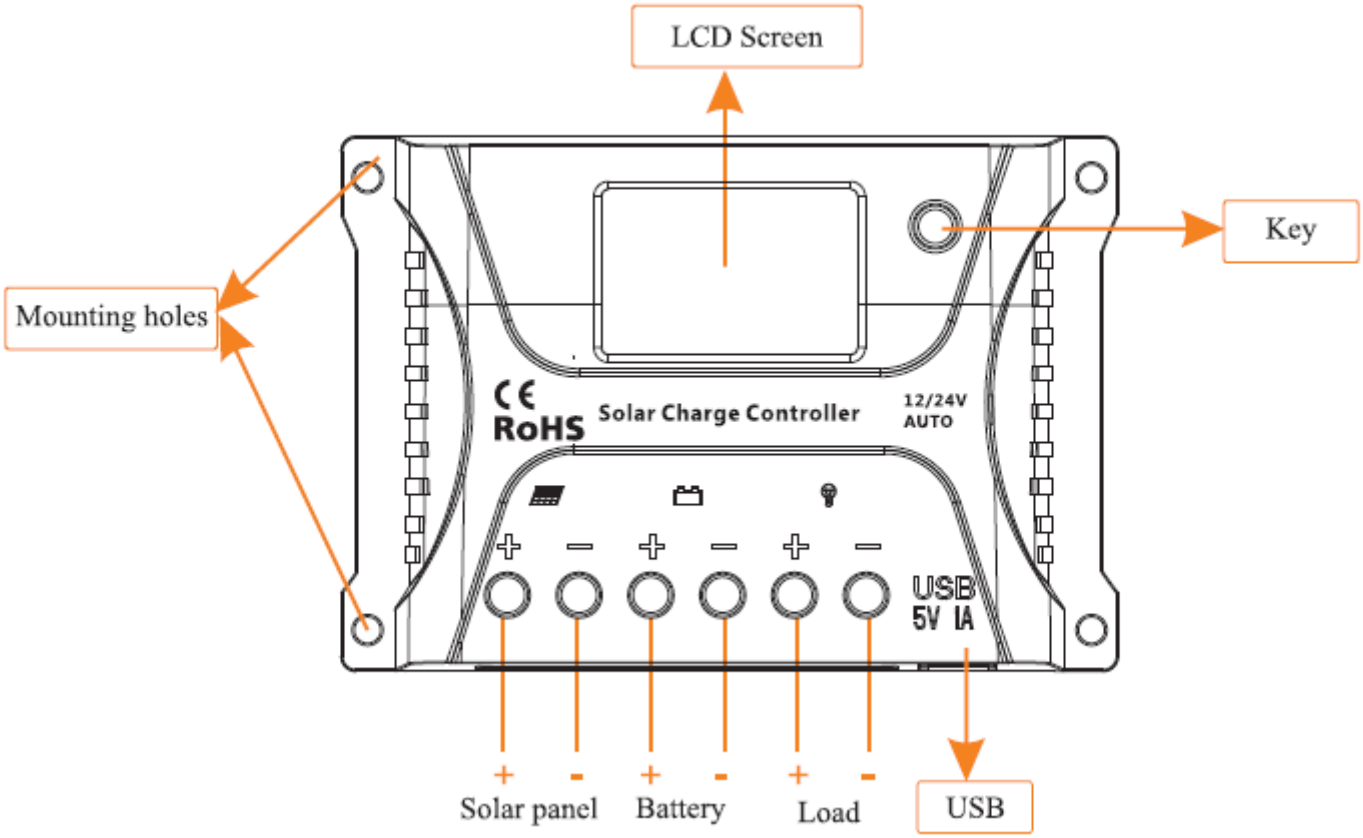

Installation Instructions and Precautions

1. The controller shall be installed securely, and its dimensions are as follows:

10A : External dimensions: 103×71×36(mm)
Installation dimensions: 96×60 (mm)
20A : External dimensions : 130×75×38(mm)
Installation dimensions : 122×64(mm)

2. Installation hole diameter:3.5(mm)

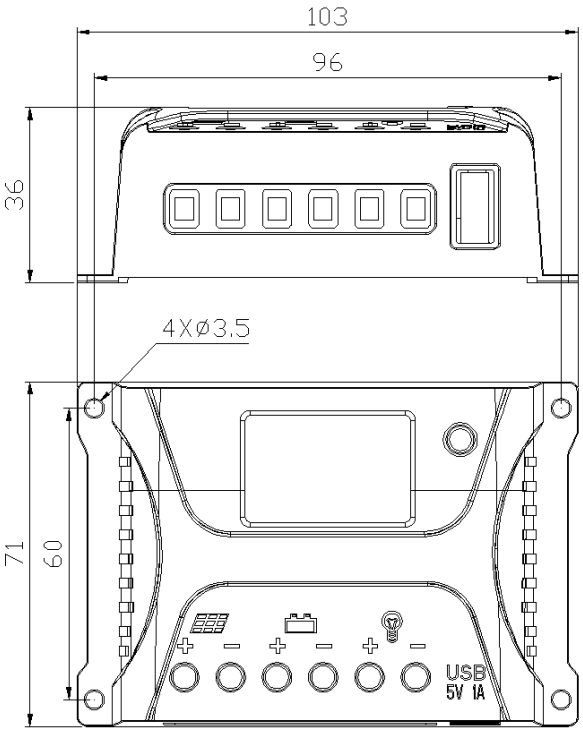

10A

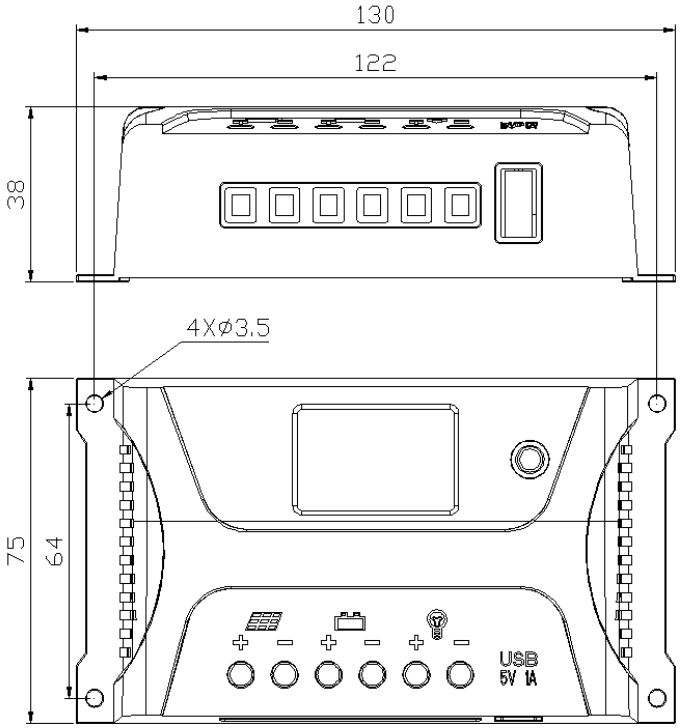

20A

3. Operation Instructions

a) Step 1: Connect the battery. If the connection is correct, the controller screen lights up; otherwise, check whether the connection is correct.

b) Step 2: Connect the solar panel. If sunlight is present and strong enough (the solar panel voltage is greater than battery voltage), the sun icon on the LCD screen is on; otherwise, check whether the connection is correct.

c) Step 3: Connect the load. Connect the load leads to the controller's load output terminal, and the current shall not exceed the controller's rated current.

4. As the controller generates heat during operation, it is recommended that the controller be installed in an environment with good ventilation conditions.

5. Choose cables with large enough capacity for connection, in case too much loss incurred on the lines causes the controller to misjudge.

6. The controller has a common positive pole inside. If grounding is needed, ground the positive pole.

7. **It's important to fully charge the battery regularly. At least once full charging every month is recommended, and failure to do that may cause permanent damage to the battery. Only when in-flow energy outpaces out-flow energy can the battery be charged fully. Users shall bear this in mind when configuring the system.**

8. **Check whether the controller's each connection terminal is tightened securely; if not, it may suffer damage when there is excessive current.**

State Indicators

LCD Icon	Indicated Object	State
	Daytime or charging	Steady on
	Night recognition	Steady off
	Load short circuit or overload	Quick flashing
	Load switched on	Steady on
	Load switched off	Steady off
	Normal battery	All on
	Over discharge	Only the outline flashes
	Overvoltage	3 dashes flashing

Browsing Menu on LCD Screen

10A Charge Controller:

The following menus are shown in an automatic cycle on the screen, with an interval of 3s.

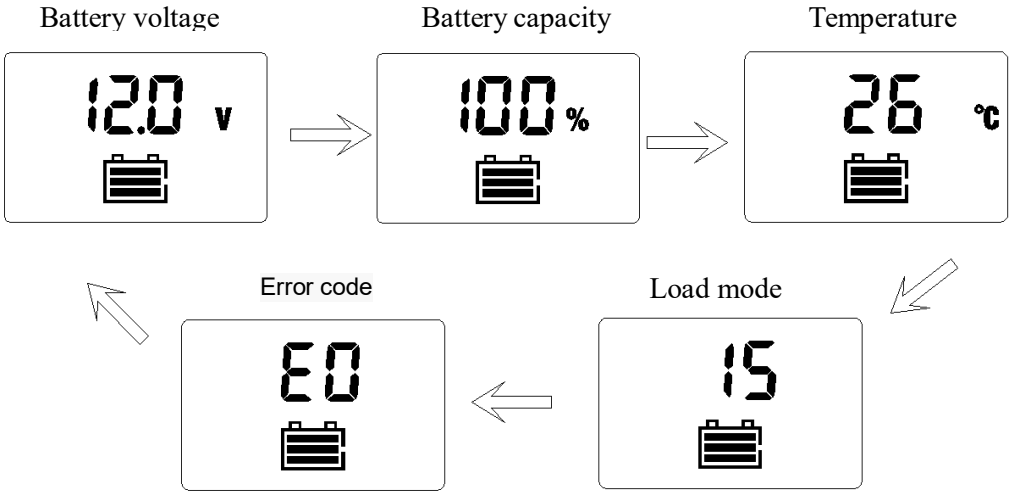

20A Charge Controller:

The following menus are shown in an automatic cycle on the screen, with an interval of 3s.

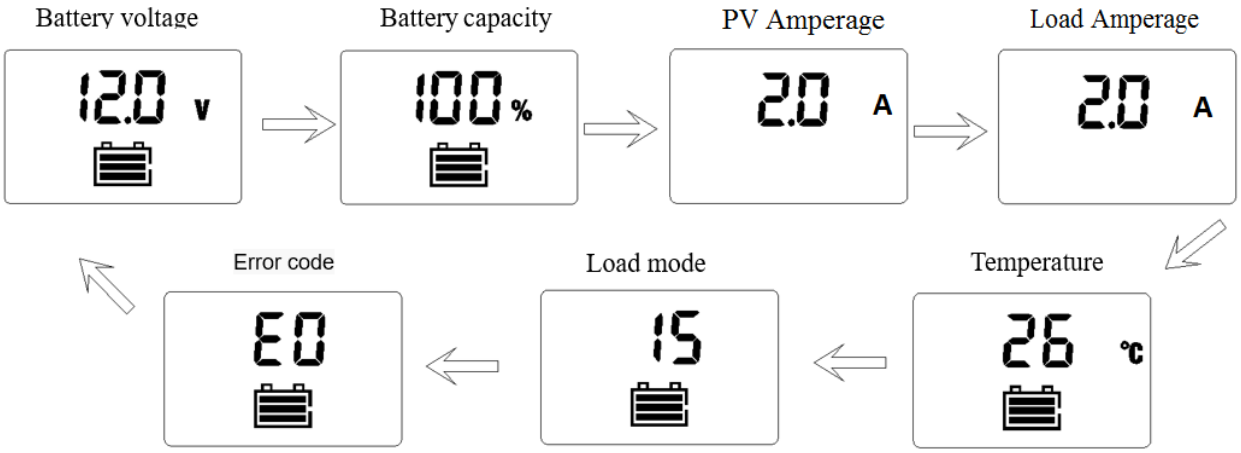

Setting Menu on LCD Screen

Long press the key in any mode to enter the load mode setting interface, and the load mode begins to flash. Short press the key to adjust the load mode, and long press the key again to save and exit mode setting or wait for 10s to let the system save and exit automatically.

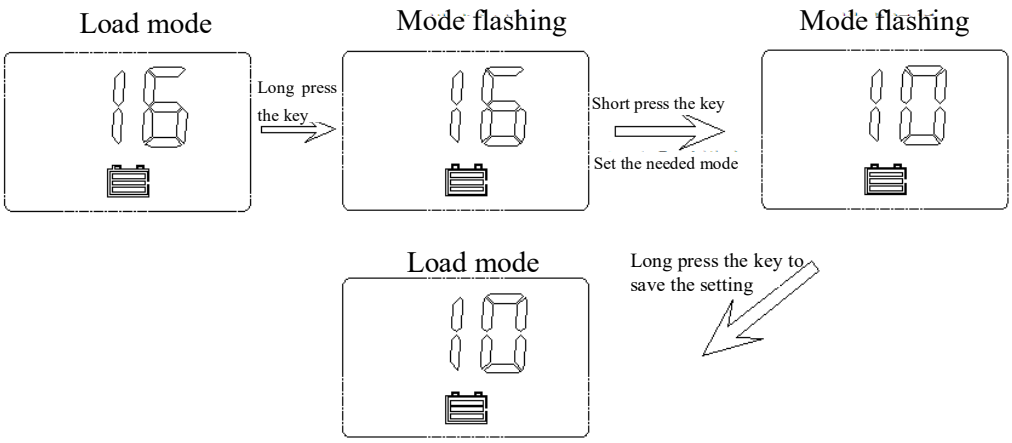

Five load Working Modes

1. Pure light control (0): When sunlight disappears and the light intensity drops to the starting point, the controller initiates a one minute delay (settable) to confirm the starting signal, and then switches on the load for operation. When sunlight emerges and the light intensity reaches the starting point, the controller initiates a **one minute** delay to confirm the shutting-down signal, and then shuts down the output to stop the load's operation.

2. Light control + time control (1 to 14): The starting process is the same as pure light control. After operating for a preset period of time (settable from 1 to 14 hours), the load stops operation automatically.

3. Manual mode (15): In this mode, the user can switch the load on or off by the key, no matter whether it's day or night.

4. Debugging mode (16): In cases of 6V with light signals, the load will be shut off. In cases of 5V (varies according to the preset light controlled voltage and system voltage) without light signals, the load will be switched on. This mode enables fast check of the correctness of system installation during installation and debugging.

5. Normal on (17): The energized load keeps in output state.

LED Display	Mode
00	Pure light control mode
01-14	Light control + time control (1 to 14 hours)
15	Manual mode（default）
16	Debugging mode
17	Normal on mode

Manually Switching On/Off Load

When the load mode is set to 15 (manual mode), short press the key (non-setting mode) in any interface to switch on or off the load.

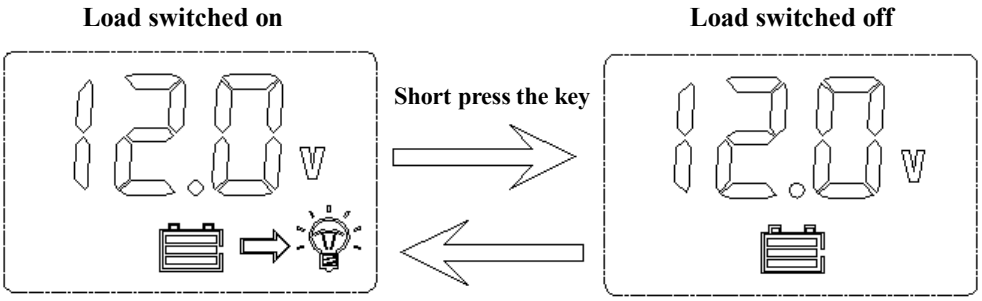

Note: As load start is a type of soft start, display of the load icon on the LCD screen will be delayed after the load is switched on.

Overload and Short Circuit Recovery

Overload and short circuit automatic recovery time: 5s at the 1st time; 10s at the 2nd time; 25s at the 3rd time; 30s at the 4th time; 30s at the 5th time, or automatic recovery the next day.

Error Code List

Code on LCD screen	Corresponding error
E0	No error

E1	battery over-discharging
E2	battery overvoltage
E4	Load short circuit
E5	Overload
E6	Controller inner temperature over heat

Common Problems and Solutions

Symptoms	Causes and Solutions
LCD screen does not light up.	Check whether the battery is correctly connected.
Incomplete display or no renewal on LCD screen	Check whether the ambient temperature is too low and whether the display recovers when the temperature rises.
No charging with sunlight present	Check whether the solar panel is correctly connected, and contact is good and reliable. Check whether the solar panel voltage falls below the battery voltage.
The battery icon flashes quickly, and there is no output.	System overvoltage. Check whether the battery voltage is too high.
The battery icon flashes slowly, and there is no output.	The battery is over-discharged, and will recover after recharged adequately.
The load icon flashes quickly, and there is no output.	The load's power exceeds the rated value or the load is short-circuited. After the problem is solved, long press the key or wait until it recovers automatically.
Other symptoms	Check whether wiring is sound and reliable, and system voltage is correctly recognized.

Technical Data Sheet

Rated current	10A	20A
current display function	No	
System voltage	Automatic recognition of 12 V/ 24 V	
No-load loss	< 10mA/12V；< 12mA/24V	
Max. Solar energy input voltage	<55V	
Max. voltage	<35V	

at the battery end		
Overvoltage protection	17.0V；×2/24V；	
Equalizing charging voltage	14.6V；×2/24V；	
Boost charging voltage	14.4V；×2/24V；	
Floating charging voltage	13.8V；×2/24V；	
Charging recovery voltage	13.2V；×2/24V；	
Over-discharge recovery voltage	12.6V；×2/24V；	
Over-discharge voltage	11.1V；×2/24V；	
Equalizing charging interval	30days	
Equalizing charging time	1H	
Boost charging time	2H	
Temperature compensation	-3.0mV/℃/2V	
Light control voltage	Light control on 5V, ×2/24V； light control off 6V, ×2/24V；	
Light control judgment time	1minute	
Operating temperature	-25℃ to +55℃；	
IP protection degree	IP30	
Net weight	100g	160g
Protection functions	Solar panel short circuit and reverse-connection protection	
	Over-temperature, overload and short circuit protection	
Dimensions	103×71×36(mm)	130×75×38(mm)

The content of this manual is subject to change without prior notice.